DWG. NO.	SH	REV

REVISIONS

ZONE	REV	ECO NO.	DESCRIPTION	DATE	APPROVED
	A		PRELIMINARY RELEASE	6-93	

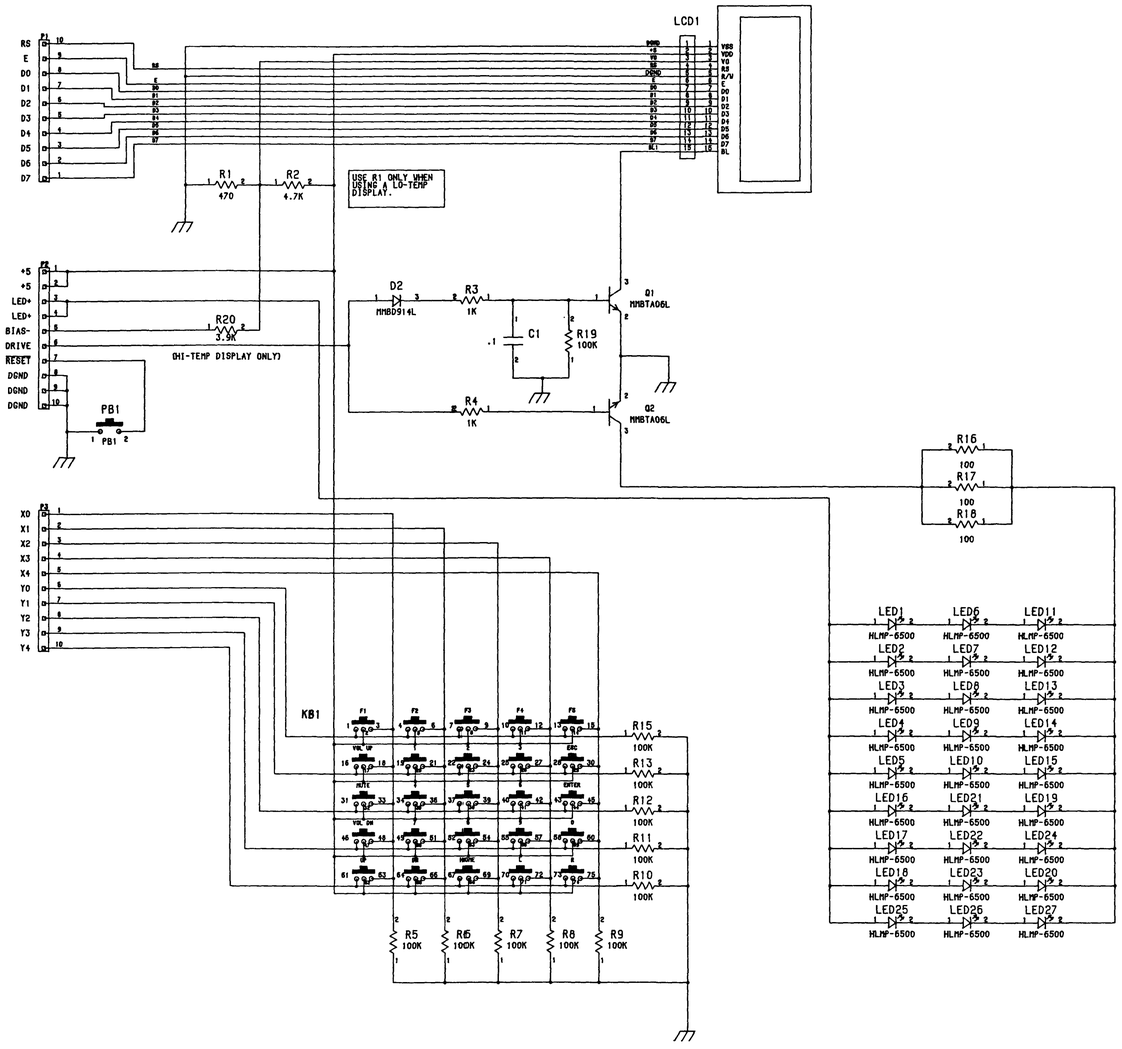

LAST USED LIST			

WP-0885 EPX2HI-TEMP

DO NOT SCALE DRAWING

APPROVALS	DATE
DRAWN WAYNE HARRIS	10/16/90
CHECKED	
FINISH	

ROCKFORD CORPORATION
TEMPE AZ.

TITLE: SCHEMATIC, SYMMETRY
LIGHTED KEY-BOARD (RDAT)
EPX2HI-TEMP

SIZE	DWG NO.	REV
D	SCH-0885	A

SCALE NONE | SHEET 1 OF 1